USN | | | | | | | | | | |

[22EE31]

THIRD SEMESTER B.Tech EXAMINATION, DECEMBER - 2023

ELECTRIC CIRCUIT ANALYSIS

Time: 3 Hours **Maximum Marks: 100**

Instructions: i. Missing data may be suitably assumed.

ANSWER ALL QUESTIONS

		PART-A	**05 X 02=10**		
1.	**a.**	State Maximum power transfer theorem and also list few of its applications	2	1	**02**
	b.	Define transient time and also the time constant of a transient circuit.	2	2	**02**
	c.	Two identical coils each having self-inductance L= 0.03 H. If coefficient of coupling, k = 0.8, determine the value of mutual inductance between the coils, M.	2	3	**02**
	d.	Give the Laplace transform of (i) unit step function (ii) exponential function	3	5	**02**
	e.	Express the voltage and current equation of the transmission line parameters.	2	6	**02**
		PART-B	**06 X 05=30**		
2.	**a.**	Use nodal analysis to determine the voltage across 5-ohm resistance and the current in the 12 V source. 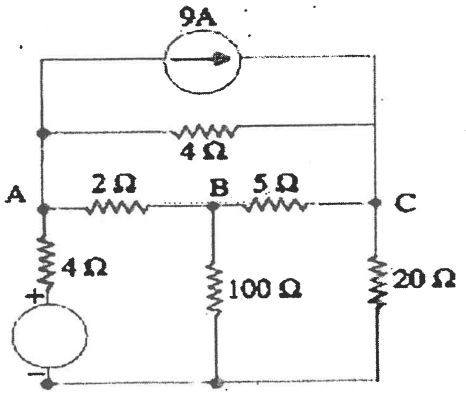	3	1	**05**
		OR			
	b.	Determine the Norton's equivalent circuit for the circuit shown in Fig. 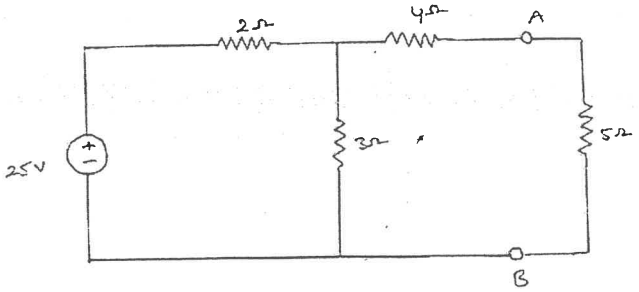	3	1	**05**

3.	a.	Derive the current through the inductor in a RL series circuit when excited by a DC source by assuming zero initial conditions and the switch is closed at time t=0.	2	2	05
		OR			
	b.	The switch in the below figure has been in position a for a long time, At t = 4 s the switch is moved to position b and left there. Determine v(t) at t = 10 s. 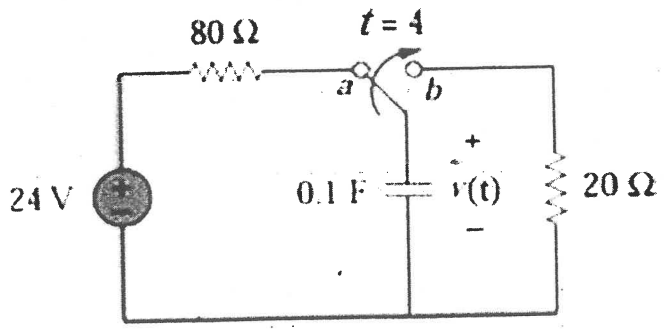	2	2	05
4.	a.	A balanced delta-connected load has a phase current IAC= 10∠− 30 0 A: i) Determine the three line currents assuming that the circuit operates in the positive phase sequence. ii) Calculate the load impedance if the line voltage is VAB= 110∠00 V.	5	3	05
		OR			
	b.	Two identical coils when connected in series across a source, the total inductance is found to be 3.0 H. When one of the coils is reversed the total inductance become 1.4 H. Find the mutual inductance between them and the self-inductance of each coil, Also find the coupling coefficient.	2	4	05
5.	a.	Determine the current through the capacitor shown in the following circuit, after the switch is closed for a supply step voltage of V volts. Assume that the capacitor is initially uncharged and use Laplace transform. 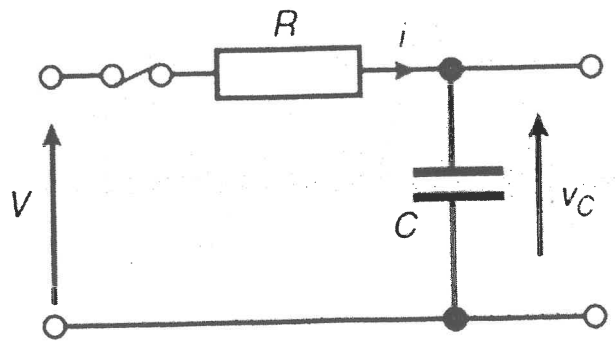	5	4	05
		OR			

	b.	A balanced star-connected load absorbs a total power of 5 KW at a leading power factor of 0.6when connected to a line voltage of 240 V. Find the impedance of each phase and total complex power of load.	5	4	**05**
6.	a.	Find the ABCD parameters for the circuit in Fig. 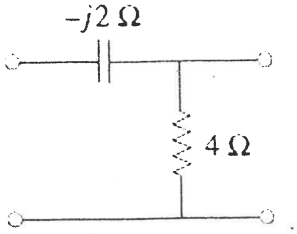	5	6	**05**
		OR			
	b.	A two port network has the following parameters: Z11 = 4 Ω, Z12 = 1 Ω, Z21 = 3 Ω and Z22 = 3 Ω. Calculate short circuit parameters.	5	6	**05**
7.	**a.**	Find the current passing through 3Ω Resistor for the circuit shown below in Fig by using Superposition Theorem. 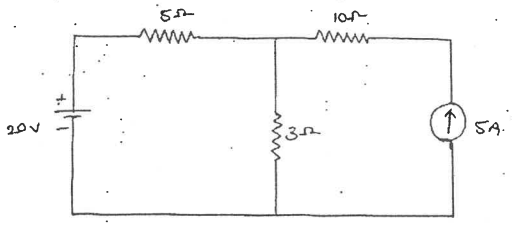	3	1	**05**
		OR			
	b.	Find the Z parameters of the T- network shown in figure below. 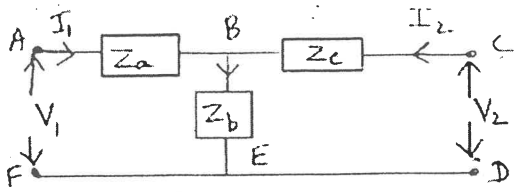	3	5	**05**
		PART-C		**06 X 10=60**	
8.	**a.**	For the circuit in Fig, find the branch currents I_1, I_2 and I_3 using mesh analysis.	3	1	**10**

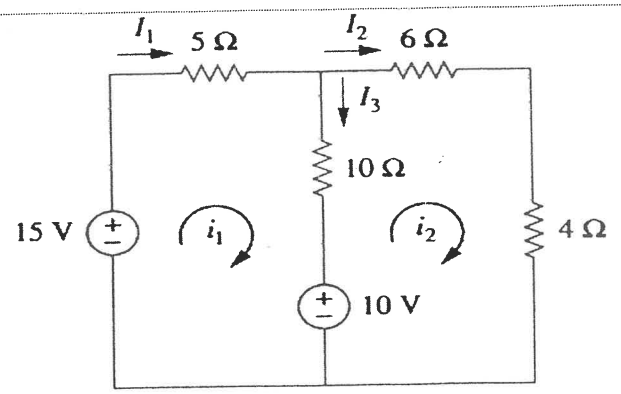

OR

	b.	In the circuit shown in Fig. obtain the condition from maximum power transfer to the load RL. Hence determine the maximum power transferred. 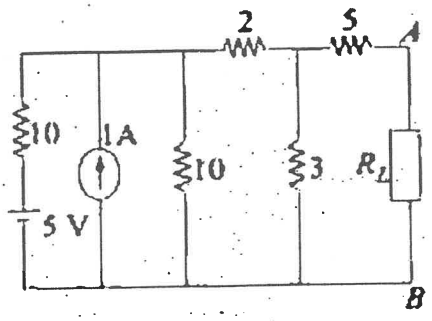	3	1	**10**
9.	**a.**	Derive the current through an inductor in a RL series circuit when excited by a DC source by assuming zero initial conditions and the switch is closed at time t=0.	2	2	**10**
		OR			
	b.	Discuss the overdamping, critically damping and under damping response of a series RLC circuit with required equations and graphs.	2	2	**10**
10.	**a.**	An RLC series circuit has a capacitance of 320 pico Farad connected across a source of 0.85 V has Q of 50 and resonant frequency of 175 kHz. Find the inductance, resistance, the current and the bandwidth of the circuit.	2	3	**10**
		OR			
	b.	A resistance of 50Ω, inductance of 29.8mH, Capacitance of 3.4μF Capacitor are connected in series across a 200V, 250HZ AC Supply. Find (a) Impedance of circuit (b) Current (c) Power consumed in the circuit (d) Power factor (e) Voltage drop across resistance (f) Voltage drop across Inductance (g) Voltage drop across Capacitance. Also draw the phasor diagram for the circuit.	2	3	**10**

11.	**a.**	The unbalanced -load as shown in below figure is supplied by balanced voltages of 200V in the positive sequence. Find the line currents. Take Vab as reference. 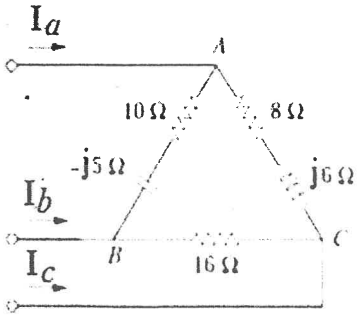	5	4	**10**
		OR			
	b.	An unbalanced delta connected load of $Z_1 = (10 - j10)\ \Omega$, $Z_2 = (20 - j20)\ \Omega$ and $Z_3 = (25 - j25)\ \Omega$ are connected across a balanced three phase supply of 415 V, 50 Hz. Find the phase and line currents and the total active power drawn by this load.	5	4	**10**
12.	**a.**	Calculate the Laplace transform of the periodic function in Fig. 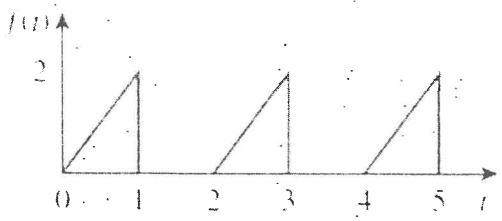	4	5	**10**
		OR			
	b.	An RL series circuit is energized by a supply of 10 V DC by closing a switch in series with it. $R = 10\ \Omega$ and $L = 5\ mH$. The circuit was under steady state before closing the switch. Find the current for time 't' greater than zero. What is the current after 5 milli seconds? Use Laplace transformations.	4	5	**10**
13.	**a.**	Define z and y parameters and obtain the relationship between them. Draw the equivalent circuit of Z – parameters.	3	6	**10**
		OR			
	b.	Determine the h parameters for the circuit shown in below figure. 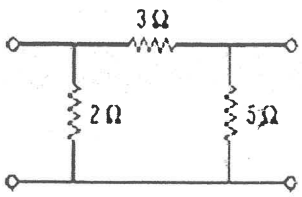	3	6	**10**